ROTARY STEP ATTENUATORS

Model RSA-35110D

Features:

- Wide Frequency Range
  0-110 dB in 1 dB Steps
- High Accuracy Rate
- Price Competitive
- Flexible Design Configurations

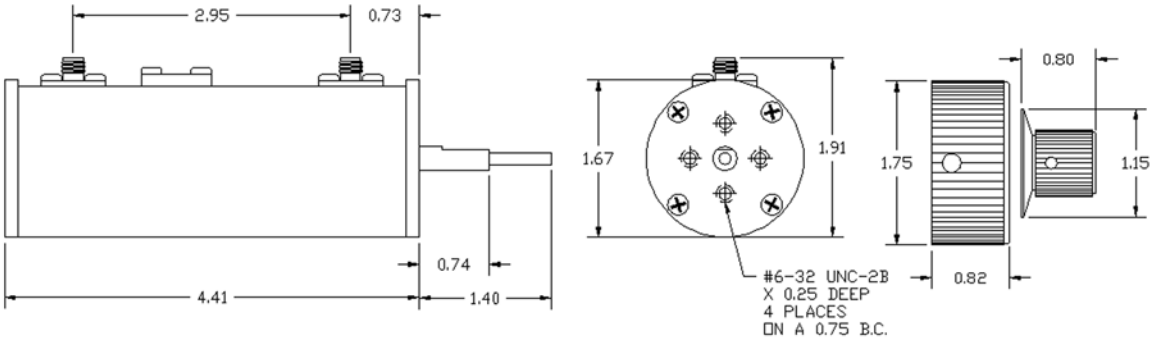

Trilithic's new state-of-the-art rotary step attenuators are designed for precision control of signal levels in the DC to 3 GHz range and are offered in a wide choice of values and increments. This new design allows for greater automation of assembly and unprecedented low cost. **Please contact the factory for your custom needs.**

SPECIFICATIONS

FREQUENCY RANGE	DC to 3 GHz
IMPEDANCE	50 Ohms
ATTENUATION	0 - 110 by 1 dB
AVERAGE POWER	2 Watts (25 Degrees C)
SWITCHING LIFE	200,000 Steps Minimum
ROTATION	Clockwise for increasing attenuation in 30 degree indexing
CONNECTORS	Female: SMA, BNC, TNC, N (BNC not recommended above 1 GHz)
HOUSING	Aluminum and Zinc
INSERTION LOSS	
DC - 1.0 GHz	0.6 dB max
1.0 - 2.0 GHz	1.0 dB max
2.0 - 3.0 GHz	1.5 dB max

ACCURACY

DC - 1.0 GHz
+/- 0.25 dB or 1.5%*

1.0 - 2.0 GHz
+/- 0.35 dB or 2%*

2.0 - 3.0 GHz

+/- 0.5 dB or 3 %*	1 - 99 dB
6%	100 - 110 dB

*Whichever is greater

VSWR / RETURN LOSS

FREQUENCY RANGE	VSWR
DC - 1000 MHz	1.3 : 1 max
1000 - 2000 MHz	1.4 : 1 max
2000-3000 MHz	1.5 : 1 max

Note: Electrical & Mechanical Specifications and Dimension may change without prior notice.

Rev. 12/04

TRILITHIC
RF & MICROWAVE COMPONENTS

PERRY JOHNSON REGISTRARS, INC. MGMT. SYS. RvA C118 UKAS QUALITY MANAGEMENT 105-A ANSI-RAB QMS ACCREDITED

Trilithic, Inc 9710 Park Davis Drive, Indianapolis, Indiana 46235 USA
Toll Free (800) 344-2412 Phone: (317) 895-3600 Fax: (317) 895-3612
Web: www.trilithic.com Email: Sales@trilithic.com